Surface Mount Back Light

LHMA-66/60 □-V
X

Details of Connector

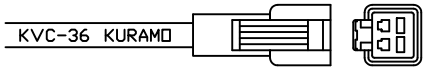

1 plus + (White/Black)
2 minus − (Black)

	Light	Power Supply
Connector	SMR-02V-B	SMP-02V-BC
Contact	BYM-001T-0.6	BHF-001T-0.8SS

＊ Only 12V USE

＊ Electric Power Consumption 6.8W

(注)製品に取り付けられているレーザタグは外さないで下さい
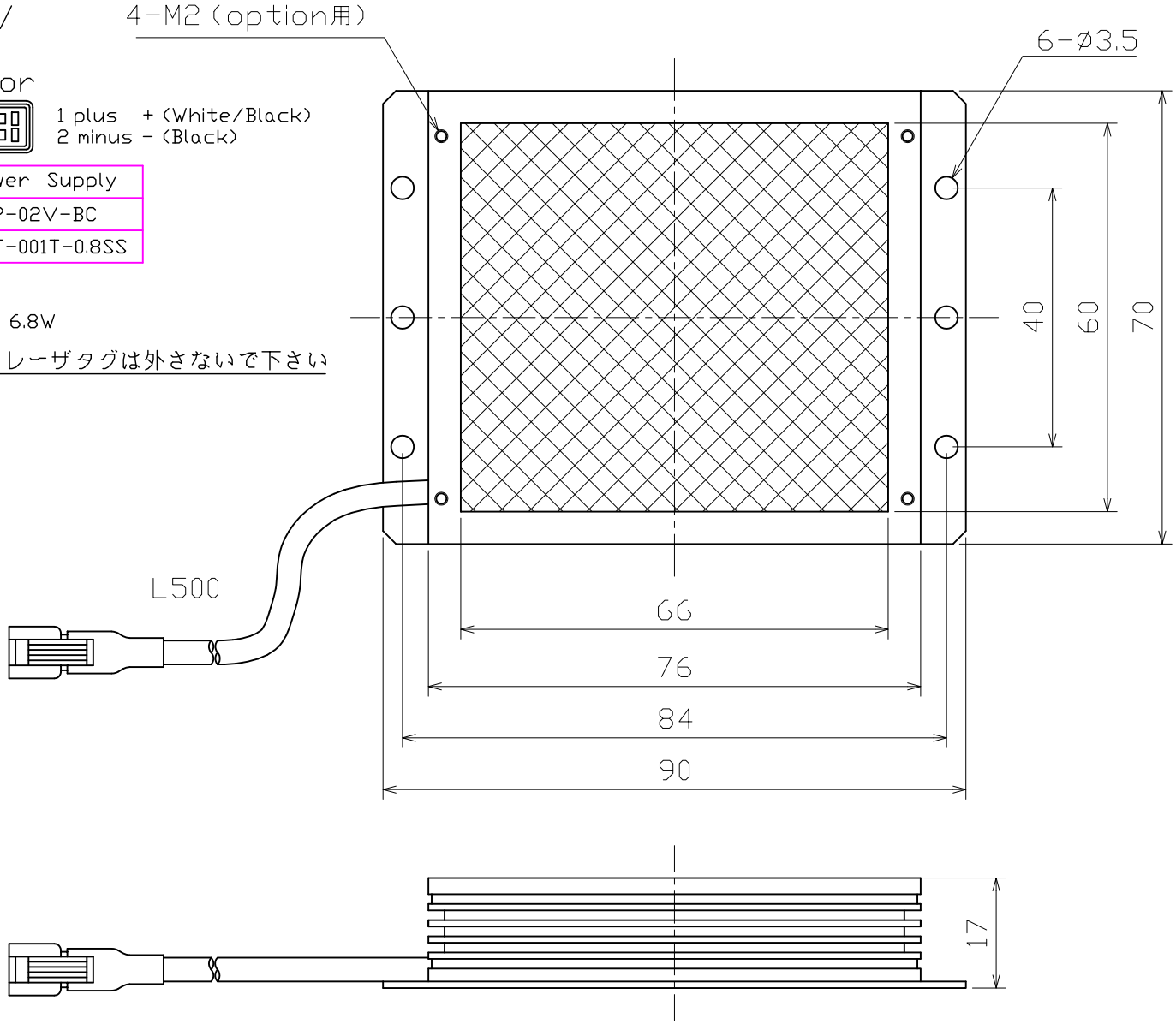
X Color	N Code
W(white)	0
R(red)	1
B(blue)	2