LED Coaxial Light

LFVA-50□-ST (DC12V model)
FVA-50□HV-ST (DC24V model)

＊ Electric Power Consumption 14W(White,Red,Blue)
11W(Infrared)

(Note)Please do not remove the tags attached to the product.
Light-emitting part during lighting, please do not look directly.

(注)製品に取り付けられているタグは外さないでください
点灯中の発光部は、直視しないでください

color □	n
White W	0
Red R	1
Blue B	2
Infrared IR-850	3

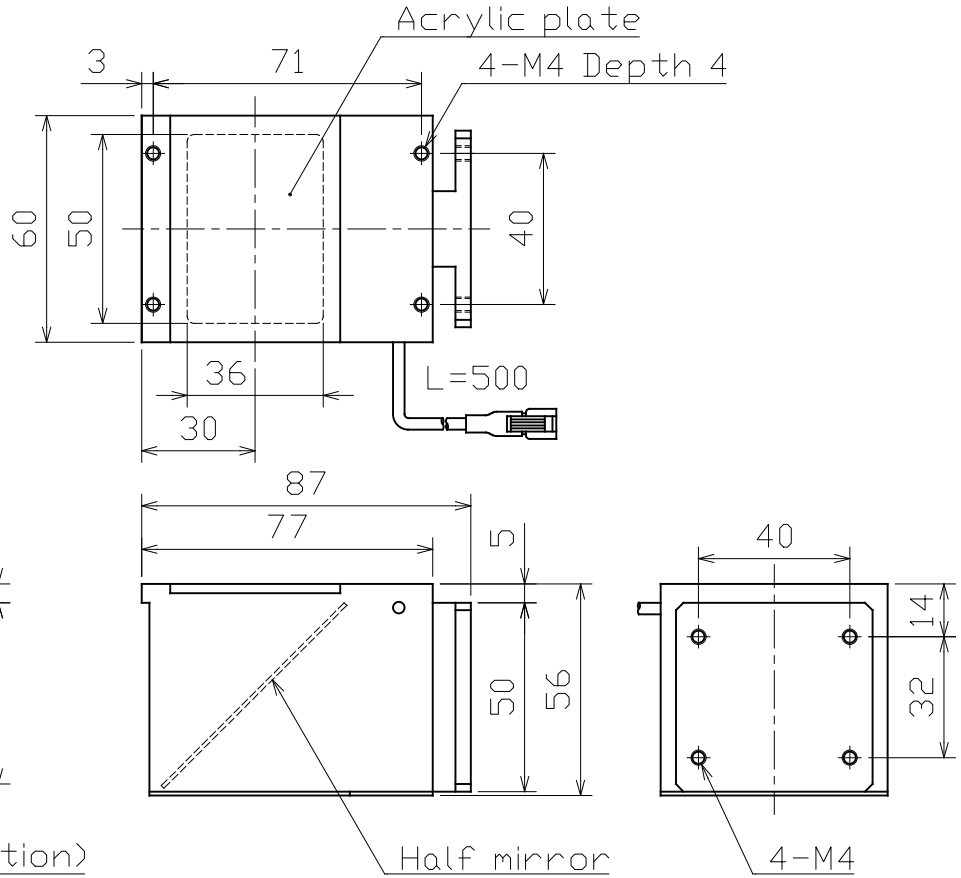

Details of Connector

・DC12V specification

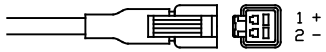

	Light	Power Supply
Connector	SMR-02V-B	SMP-02V-BC
Contact	BYM-001T-P0.6	BHF-001T-0.8SS

・DC24V specification

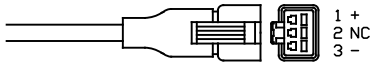

	Light	Power Supply
Connector	SMR-03V-B	SMP-03V-BC
Contact	BYM-001T-P0.6	BHF-001T-0.8SS